2021 Catalogue

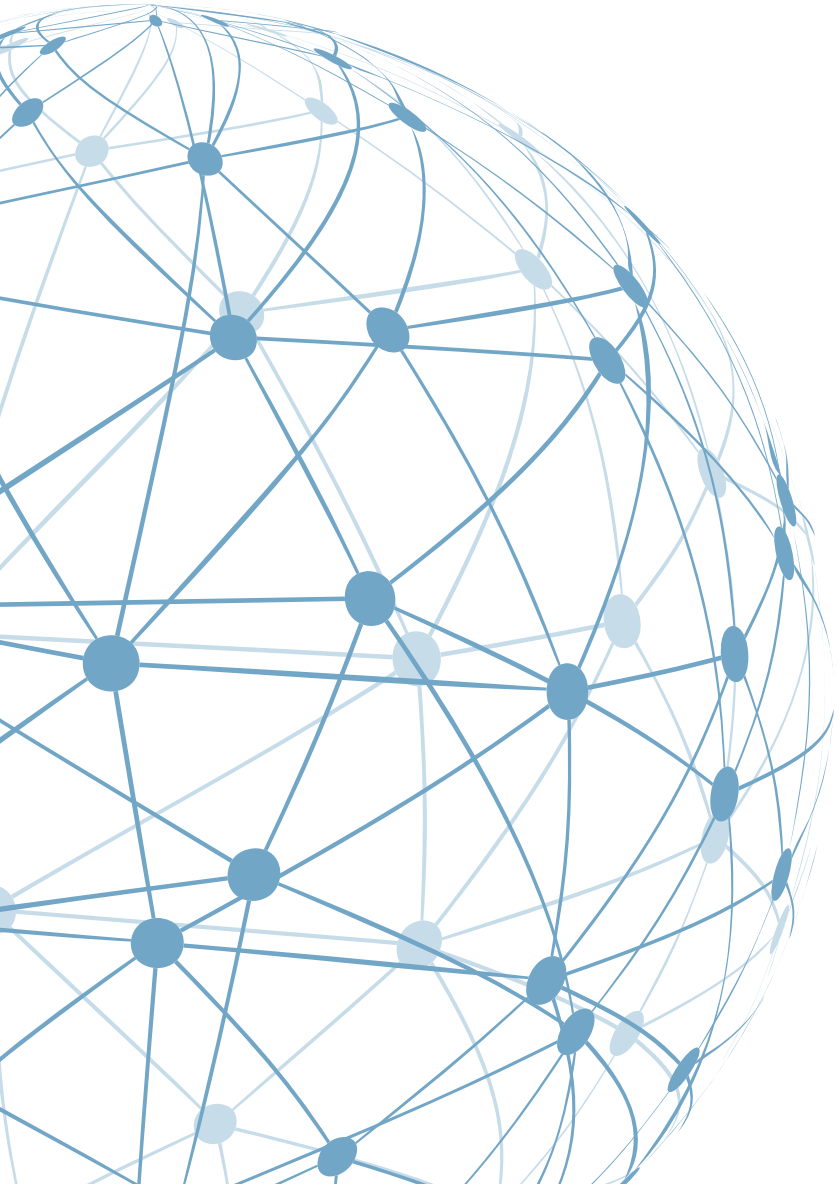

AMI Connect

Contents

Who We Are

Core values 2
Airtime provision and services 3

Cellular Signal Boosters

Cel-Fi GO Stationary 4
Cel-Fi GO Mobile 5
Cel-Fi GO Marine 6
Cel-Fi PRO 8

Portable Satellite Phones

IsatPhone 2 10
Iridium 9555 12
Iridium Extreme® 14
Iridium GO!® 16

Fixed Satellite & Docking Units

IsatDock2 DRIVE 18
IsatDock2 MARINE 20
LT-3100 System 22

VMS, Tracking & GMDSS

LT-3100S GMDSS System 24
SAILOR® 6140 mini-C Maritime 26
SAILOR® 6110 mini-C GMDSS 28

Broadband & VSAT Systems

SAILOR® Fleet One 30
SAILOR® 4300 L-Band 32
Connect v60E 34
Connect v65 36
Connect VSAT Range 38

Bandwidth Management Solutions

Connect RedPort 40
Connect SeaBrowser 42

IP Based Radio

Connect PTT 45

AMI Connect

AMI Connect Head Office:
107 Forsyth Street, O'Connor 6163, WA
T: (08) 9331 0070
E: sales@amiconnect.com.au
Support: support@amiconnect.com.au

Branches Australia Wide & International
Perth, Adelaide, Sydney, Brisbane, Darwin, Cairns, Melbourne, Singapore & Vietnam
Visit us online: www.amiconnect.com.au
A Member of the AMI Group | ABN: 88 569 498 390

Who we are

Core Values

AMI Connect (formerly trading as Global Maritime Data and Airtime Solutions) is your solutions partner for satellite communications requirements.

Our product range includes technology from world leading Manufacturers and satellite operators.

AMI Connect is perfectly positioned to provide Australasia with a world-class satellite communications service, with our head office in Fremantle, Western Australia, and branches throughout Australia, Singapore and Vietnam.

Our products are ideal for situations which require communication in remote areas, or where high performance voice and data solutions are needed for commercial and leisure application.

Those working in mining, oil and gas, maritime, offshore, engineering and media, to name a few industries, are sure to benefit from airtime packages tailored by AMI Connect to meet any requirement.

Our clients are as varied as they come: Japanese supertankers and offshore vessels; mining camps and rural farms, super yachts; fast ferries and fishing vessels; St. John ambulances and truck fleets… we have a communications solution for every situation.

Visit us online at www.amiconnect.com.au

Airtime provision and services

AMI Connect enable our users to access service coverage from market leaders in satellite communications and airtime, through the largest and most reliable satellite networks available across the globe, at a competitive price.

Whether an offshore cruising sailor or working remotely in some of the regions most isolated areas, our partnership with prime networks such as Iridium and Inmarsat ensure stability and coverage.

Contact us about post and pre-paid plans for a variety of technologies, along with genuine hardware and service plans.

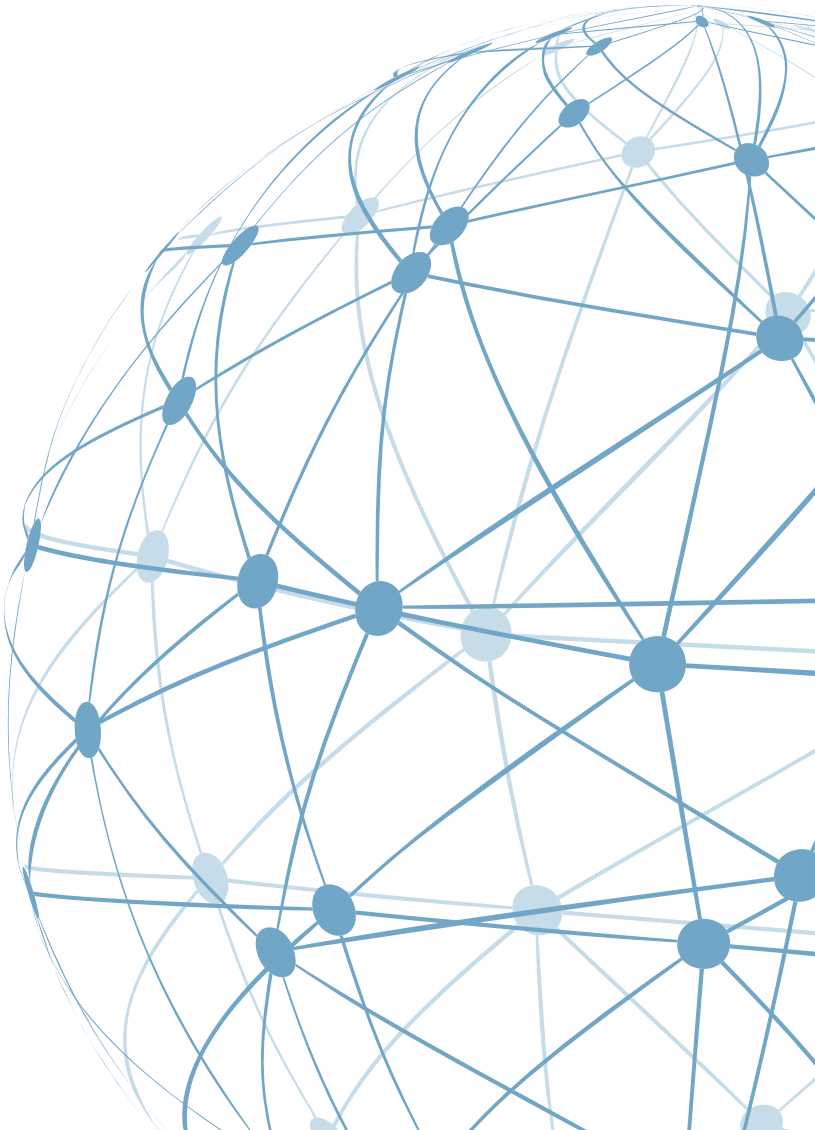

Cel-Fi GO Stationary

The evolved smart signal booster that can amplify cellular signals up to 100 dB.

The Cel-Fi GO Stationary Smart Signal Repeater, the first carrier-class indoor/outdoor cellular coverage solution to feature industry leading 100 dB system gain and Nextivity's unconditionally network safe guarantee. Cel-Fi GO Stationary leverages the award-winning Intelliboost signal processing to deliver the industry's largest coverage footprint with the best voice and data wireless performance.

Cel-Fi GO Stationary is IP54 rated weather resistant and does not interfere with other wireless devices. This multi-band solution is ideal for use in commercial properties, government buildings, agricultural settings, small manufacturing operations, rural areas, businesses, and large homes.

Features

- 3G / 4G / 4GX Voice and Data
- Up to 15,000 ft2 (1,500 m2) of Coverage
- Multi-Band Support
- Indoor / Outdoor IP54 Rated
- Network Safe

Technical Specifications

Cel-Fi GO STATIONARY	
Configurations	Band 3/5/28 3-front end receivers that relay a single band.
Physical Specification	255mm x 87mm x 28mm 600g
System Gain	Up to 100 dB Gain

Cel-Fi GO Mobile

The evolved in-vehicle smart signal booster that's great for cars, trucks, RVs and marine installations.

The Cel-Fi GO Mobile Smart Signal Repeater, the first carrier-class mobile cellular coverage solution to feature industry-leading 70 dB system gain and Nextivity's unconditional network safe guarantee. Cel-Fi GO Mobile leverages artificial intelligence and award-winning Intelliboost signal processing to deliver the industry's best voice and data wireless performance for mobile subscribers on the move.

Cel-Fi GO Mobile is IP54 rated weather resistant and does not interfere with other wireless devices. This multi-band solution is ideal for trucks, vehicles, RVs, and boats.

Features

- 3G / 4G / 4GX Voice and Data
- Multi-User Mobile Coverage
- Multi-Band Support
- Indoor / Outdoor IP54 Rated
- Network Safe

Technical Specifications

Cel-Fi GO MOBILE	
Configurations	Band 3/5/28 3-front end receivers that relay a single band.
Physical Specification	255mm x 87mm x 28mm 600g
System Gain	Up to 70 dB Gain

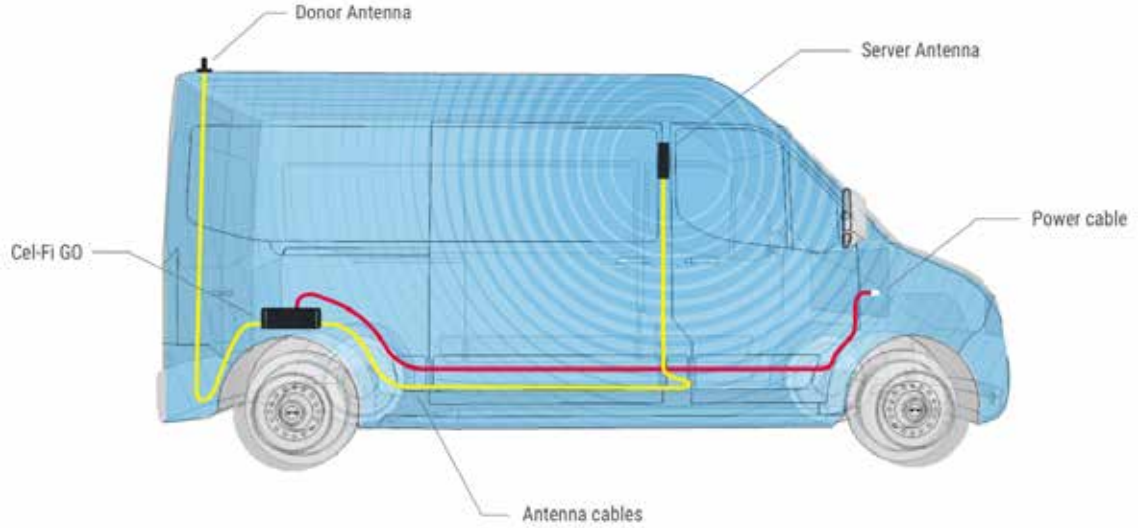

Cel-Fi GO Marine

Boost and distribute a 3G/4G mobile signal on a boat, ship or marine vessel.

Supporting voice and mobile internet for multiple mobile devices, boosting your mobile coverage at sea has never been easier.

Features:

- Supports 3G (850) and 4G (700/1800) – only one band at a time
- Designed for marine applications
- 100dB of system gain (latest software update required using WAVE App)
- Includes external and internal antennas
- Carrier approved
- Band Selection Button
- Bluetooth WAVE App for iPhone, Android & Computers

Available Marine Packs:

Cel-Fi Marine Pack (Adhesive Mount)

- Cel-Fi GO Mobile
- Blackhawk Marine Omni High Gain Antenna (7/10 dBi)
- Standard adjustable mount
- Blackhawk Adhesive Mount 700-2700MHz 3.5dBi
- 1 x 10m PT240 LSHF cable
- 1 x 12v Power Supply

Cel-Fi Marine Pack (Wall Mount)

- Cel-Fi GO Mobile
- Blackhawk Marine Omni High Gain Antenna (7/10 dBi)
- Standard adjustable mount
- Blackhawk Wall Mount 698-4000MHz 5/7dBi Panel Antenna -150dBc PIM
- 1 x 10m PT240 LSHF cable
- 1 x 6m PT240 LSHF cable
- 240v and 12v Power Supply

Sample Layout

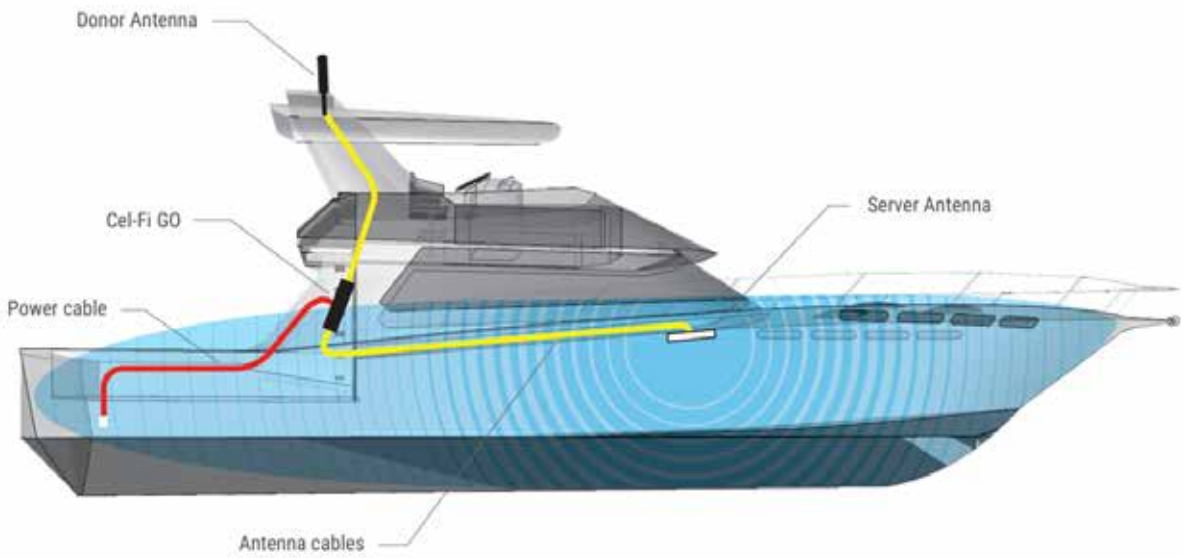

Cel-Fi GO PRO

Indoor Smart Signal Booster for 3G, 4G and 4G LTE networks around the world.

Cel-Fi PRO improves 3G, 4G, and LTE cellular service by eliminating dead zones and dropped calls. With 100 dB of gain, Cel-Fi PRO will not only improve cellular service across four (4) concurrent bands, it will also reduce your cell phone's power requirements and extend its battery life. Cel-Fi PRO covers up to 13,000 ft2 (1,200 m2) of indoor space per system.

Cel-Fi PRO systems feature an LCD color interface, are fully self-contained and self-configuring, and require no external antennas or wiring. Simply plug it in to boost indoor cellular coverage.

Benefit to Consumers

- Improved Voice Coverage
- Improved Data Throughput
- Improved Battery Life
- Ease of Installation

Benefit to Operators

- Reduced Churn
- Higher Data Service Usage
- Decreased Operational Cost
- Network Safe
- Operator Specific
- Self Adjusting
- Multi Technology Support
- Multi Carrier Support

Technical Specifications

Cel-Fi GO PRO	
Configurations All systems are reconfigured to specific carriers	Bands 1/3, 1/7, 1/8, 1/3/7, 1/3/8, 1/3/7/8, 1/3/8/20, 1/7/8/20, 2/5, 2/4/5/12, 1/3/5/28, or 3/5/28
Power Consumption	Full uplink: • 30 Watts Idle: • <20 Watts
Physical Specification	Network Unit: 179 x 155 x 110mm (540g) Coverage Unit: 160 x 164 x 70mm (450g)
Certifications	CE, FEE, RoHS, IC, EAC, R&TTE & EN
Electrical & Environmental Requirements	12 VDC -25 to 60 Celsius
Physical Specification	Network Unit: 179 x 155 x 110mm (540g) Coverage Unit: 160 x 164 x 70mm (450g)

Sample Layouts

One Level

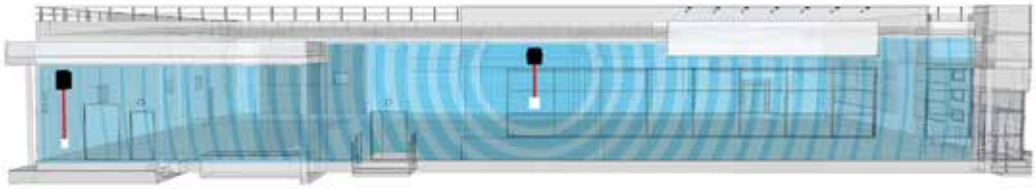

Two Level

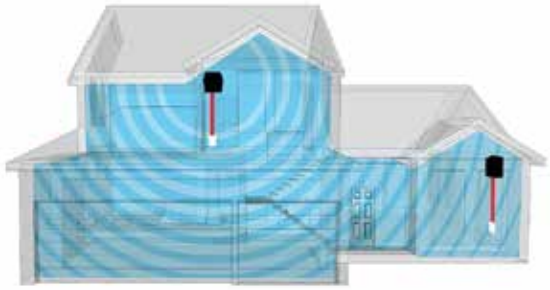

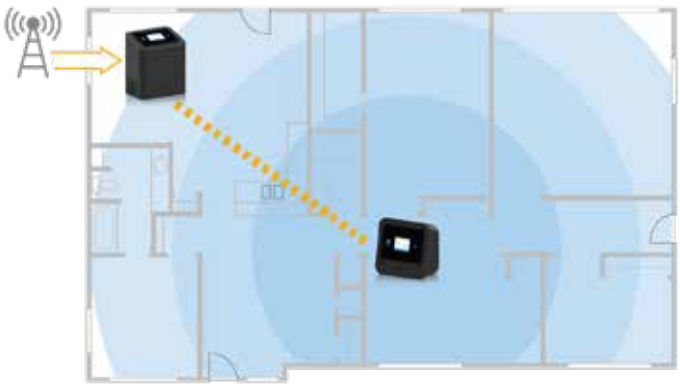

IsatPhone 2

Satellite Phone

Designed to work with the most reliable satellite communications network in the world. Stay connected in the most extreme and remote locations.

Features

- Dust, water & shock resistant - IP68, IK04
- Reliable in any condition.
- High performance
- 8+ hours of talk time
- 160 hours on standby
- Airtime additional, e-vouchers conveniently available on our website.
- High quality voice
- Rugged design
- Assistance button and GPS tracking
- Incoming call alerts even with antenna stowed

Technical Specifications

Physical	
Length:	169mm (6.7”)
Width:	52mm (2”) without antenna 75mm (3”) with antenna
Depth:	29mm (1.1”) in hand 36mm (1.4”) at deepest point
Weight:	318g (11.2oz) – including battery
Display:	High-contrast colour screen
Interfaces:	Micro USB Audio socket Antenna port Bluetooth 2.0
Durability:	IP65 IK04
Operating range:	-20°C to +55°C (-4°F to +131°F)
Storage range:	-20°C to +70°C (-4°F to +158°F) (with battery)
Charging range:	0°C to +45°C (+32°F to +113°F)
Battery	
Type:	Lithium-ion, 3.7 volts
Talk time:	Up to 8 hours
Standby time:	Up to 160 hours
Services	
Satellite telephony:	2.4kbps voice codec
Voicemail:	Speed dial 1
Supplementary voice services:	Call history Caller ID Call waiting Call divert Call holding Conferencing Call barring Speed dialling Fixed number dialling
Text-to-text:	160 Latin / ~74 non-Latin characters Up to 10 concatenations Standard and predictive text
Text-to-email:	160 Latin / ~74 non-Latin characters Up to 10 concatenations Incoming email – 160 Latin characters / ~74 non-Latin characters
Web message-to-IsatPhone 2:	Free from message.inmarsat.com
GPS location data:	View position Send as text or email

This map is illustrative of IsatPhone 2 coverage. It does not provide a guarantee of the extent of service availability. Please note, Alphasat coverage prioritises the region north of 44°S and service may degrade south of this latitude.

Iridium 9555

Satellite Phone

Iridium 9555 packs a lot of power into a small, durable handset – and it works everywhere.

Features

- Compact size for easy portability
- Intuitive user interface for out-of-the-box functionality
- Industrial grade design for unparalleled durability
- Enhanced SMS and email messaging capability
- Integrated speakerphone
- Headset and hands-free capability
- Internally stowed antenna
- Mini-USB data port

Technical Specifications

Physical	
Dimensions	143 mm (L) x 55 mm (W) x 30 mm (D)
Weight	266g (9.4 oz)
Duration	
Standby time	Up to 30 hours
Talk time	Up to 4 hours
Display	
200 character illuminated graphic display	
Volume, signal and battery strength meters	
Illuminated weather-resistant keypad	
Calling Features	
Integrated speakerphone	
Quick-connect to Iridium voicemail	
Two-way SMS and short email capability	
Pre-programmable International Access	
Code (00 or +)	
Mailbox for voice, numeric and text messages	
Selectable ring and alert tones (8 choices)	
Memory	
100 entry internal address book, with capacity for multiple phone numbers, email addresses and notes	
SIM-based address book with 155 entry capacity	
Call history retains received, missed and dialed calls	
Usage Control Features	
User-configurable call timers to manage costs	
Keypad lock and PIN lock for additional security	

Compact Power

Iridium 9555 packs serious power into its small frame. With a significantly reduced footprint from our previous phone, more hand-friendly form factor, and space-saving features such as an internally stowed antenna, this sleek handset is designed to easily go wherever your customers go.

Rugged and Reliable Critical Lifelines

Iridium 9555 is a dependable, ruggedly built tool, not a toy. It won't play games, take pictures, or play MP3s. What it will do is work. Everywhere. It is engineered to withstand some of the world's toughest environments, so the world's toughest customers can depend on it as a critical lifeline whenever and wherever need takes them.

Iridium Extreme®

Satellite Phone

Unparalleled reach. In hand, everywhere.

It's time to raise expectations of what a satellite phone should be. Iridium Extreme® combines location awareness, a fully integrated SOS button with included emergency response service, and market leading toughness — letting you take durability, reliability and versatility with you in hand, all over the world.

Features

- GPS-enabled location-based services
- Online tracking
- Customized solutions enabled for diverse markets
- Accessories to dramatically enhance personal communications
- Satellite Emergency Notification
- Device (SEND) compliant SOS button design
- Reliable two-way global coverage
- Toughest military-grade designed satellite handset ever built

Technical Specifications

Physical	
Dimensions:	140 mm (L) x 60 mm (W) x 27 mm (D)
Weight:	247g
Duration	
Standby time:	Up to 30 hours
Talk time:	Up to 4 hours
Display	
200-character, daylight-readable display	
Integrated back-light for nighttime viewing	
Illuminated weather resistant keypad	
Calling Features	
Integrated speakerphone	
Quick-connect to Iridium voice mail	
Two-way SMS and short email	
21 supported menu languages	
Pre-programmable International Access Code (00 or +)	
Mailbox for voice, numeric and text messages	
Selectable ring and alert tones (8 choices)	
Durability Specifications	
Military-grade ruggedness (MIL-STD 810F)	
Ingress Protection (IP65)	
Memory	
100-entry internal phonebook, with capacity for multiple phone numbers, email addresses and notes	
Call history retains received, missed and dialed calls	
Usage Control Features	
User-configurable call timers to manage costs	
Keypad lock and PIN lock for additional security	

Real Global

Real Mobile

Real Reliable

Emergency Button

Online Tracking

GPS Positioning

SMS

Data Tethering

Voice

Jet Water Resistant

Shock Resistant

Dust Proof

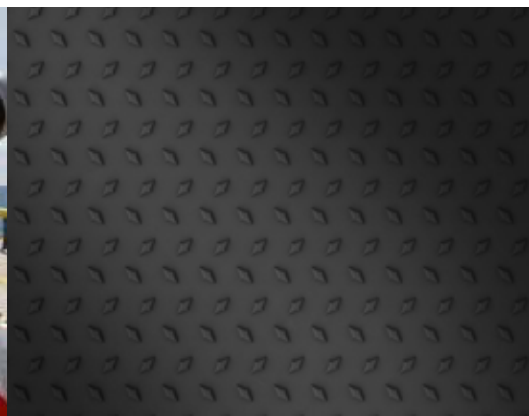

Iridium GO!®

Your smartphone will work anywhere on the planet.

Iridium GO!® creates the first ever reliable global connection for voice calling and text messaging using your own smartphone or tablet, as well as provides enhanced data capabilities offered through optimized apps to meet your unique needs. No worries. No roaming charges. Just connected and in touch wherever you are, whenever you need, with the devices you rely on every day.

Iridium GO! supports a full range of global communications using optimized apps:

- Voice calls
- Text messaging
- Email access
- Weather updates
- Customized third-party apps
- Emergency alerts (SOS)
- Photo sharing
- GPS tracking
- Posting to Facebook/Twitter

Technical Specifications

Physical	
Dimensions:	11.4 x 8.2 x 3.2 cm
Duration	
Standby time:	Up to 15.5 hours
Talk time:	Up to 5.5 hours
What's in the Box	
Iridium GO! device	
Battery	
Universal AC Travel Charger	
USB Charging/Data Cable	
Four International Adapters	
AC Adapter (Car Charger)	
Protective Cover	
User Manual	
Legal Information Booklet	
GEOS Emergency Services	
Brochure	

Easy to Use:

- Stable, lay-flat design
- Flip-up antenna
- Built-in menu/status display
- Durability Specifications:
- Military-grade ruggedness
- (MIL-STD 810F)
- Ingress Protection (IP65)

Flexible:

- Custom app platform for developers (SDK)
- Robust line of accessories

IsatDock2 DRIVE

The only Inmarsat Certified dock for the IsatPhone 2

A highly featured docking station for the Inmarsat satellite handset that can be used in various maritime and transport applications considerably extending the functionality of the handset.

Features

- Slim line compact installation
- Handsfree
- Privacy Handset option (ISD955)
- Voice, SMS and Circuit Switched Data capable
- Tracking and SOS (Via the ISatPhone 2)
- USB data interface
- Accessory / Ignition sense / Horn Alert
- 10-32V DC power input
- AC Plug pack 110/240 input (optional)
- SMA Connectors – Inmarsat Antenna / GPS Antenna
- Full certified, FCC, Industry Canada, Inmarsat, RoHS, CE, IEC60945, AS/EN60950
- 2 year repair or replacement warranty

Technical Specifications

Average Power Consumption Current @ 12V	Average	Watts
Standby + Charging	360mA	4.3W
Transmit + Charging	875mA	10.5W
Sleep Mode	5mA	60mW
Peak Current	3.5mA	42W
Connectors/ Interfaces		
Configuration Port	USB Micro	
Antenna	TNC-Female	
GPS Antenna	SMA-Female	
Microphone	2-way microFit	
Speaker	2-way microFit	
10-32 VDC	4-way microFit (AC/DC adaptor, or DC lead)	
Privacy Handset Port	RJ9 connector	
LEDs/Buttons	Status LED, Track, Mute, Up and Down	
Certifications		
Inmarsat Type Approval		
FCC		
CE Compliance		
Electrical Safety		
RoHS		
Industry Canada		
C-Tick		
EMC Compliance		
I/O Alert		
1 x Beam Alert Loop	Bare Wire - Normally Closed loop IN to OUT	
Track (Personal Alert*) button	In-built - single key press	
* NOTE	This action is optional, only when the Personal Alert Mode for your IsatPhone 2 is configured	
Temperature	Degrees °C	Degrees °F
Operating Range	-30°C to +70°C	-22°F to +158°F
Storage	-35°C to +85°C	-31°F to +185°F
Battery Charging	0°C to +45°C	32°F to +113°F
Humidity	< =75% RH	
Kit Contents		
IsatDock2 DRIVE		
2 x IsatDock2 Adaptors		
Universal Mounting Bracket (RAM)		
Speaker & Microphone		
10-32V DC Power Cable/fuse kit		
User Manual		
Quick Start Guide		

IsatDock2 MARINE

IP54 rated intelligent docking station for the IsatPhone 2

Specifically designed for maritime application

Features

- Intelligent POTS/RJ11 interface
- Supports Personal Alert and
- Assistance Alert of the IsatPhone 2
- Active privacy handset
- High quality marine enclosure
- Supports External I/O
- Charges IsatPhone 2
- RJ11/POTS interface
- PABX Integration
- Supports Assistance Alert & Tracking via IsatPhone 2
- 2 year repair/replacement warranty
- Active Privacy Handset
- In-built handsfree speakerphone
- Adjustable in-built ringer
- Mute facility
- Status LED with adjustable brightness
- USB data access
- Includes IsatDock2 adapters (2x)

Technical Specifications

Average Power Consumption Current @ 12V	Average	Watts
Power w/o IsatPhone 2	130mA	1.6W
Standby + Charging	360mA	4.3W
Transmit + Charging	875mA	10.5W
Sleep Mode	5mA	60mW
Peak Current	3.5A	42W
Physical Specifications		
Dimensions	"276 x 208 x 100 (mm)"	"10.9 x 8.2 x 3.9 (inches)"
Weight - Dock	1.67kg	3.67lbs
Total Kit Weight	2.72kg	5.99lbs
Environment Specifications		
Operating Range	-30°C to +70°C	-22°F to +158°
Storage	-35°C to +85°C	-31°F to +185°F
Battery Charging Temp#	0°C to +45°C	+32°F to +113°F
Humidity	< =75% RH	
Connectors / Interfaces		
POTS/RJ11	RJ11/2-wire, 5REN @ 600m, Adjustable dial, ring, busy tone configured frequency and adaptive impedance.	
BEAM Antenna	TNC-Female	
GPS Antenna	SMA-Female	
10-32 V DC	4-way microFit (AC/DC adator, or DC lead)	
Privacy Handset Port	RJ9 connector	
Configuration/Data	USB Micro	
Speakerphone	In-built speaker and microphone	
I/O Alert		
1x BEAM Alert Loop	Bare wire - "Normally Closed" loop IN to OUT	
Personal Alert	In-built single key press	

Certifications	Accessories	
Inmarsat Type Approval	ISD710	Maritime Antenna (Active)
FCC	ISD932	6m SMA/TNC Cable Kit (Active)
CE Compliance	ISD933	13m SMA/TNC Cable Kit (Active)
Electrical Safety	ISD934	18m SMA/TNC Cable Kit (Active)
RoHS	ISD935	30m SMA/TNC Cable Kit (Active)
Industry Canada	ISD938	40m SMA/TNC Cable Kit (Active)
C-Tick	ISD942	50m SMA/TNC Cable Kit (Active)
EMC compliance	ISD943	60m SMA/TNC Cable Kit (Active)
	ISD944	70m SMA/TNC Cable Kit (Active)
	ISD945	80m SMA/TNC Cable Kit (Active)
IP54 Rating 5 = Protected against dust limited ingress (no harmful deposits) 4 = Protection against water sprayed from all directions - limited ingress permitted.	ISD946	90m SMA/TNC Cable Kit (Active)
	ISD947	100m SMA/TNC Cable Kit (Active)
	ISD960	IsatDock2 Adaptor
	RST055A	UPS Battery Pack
	RST410	"Man Down" Pendant Kit

KIT CONTENTS
IsatDock2 MARINE
2 x IsatDock2 Adapters
110-240V AC Plug Pack
Privacy Handset
10-32V DC Power Cable
2m Alert wiring loop
Wall Mounting Plate
User Manual & Quick Start Guide

LT-3100 System

LT-3100 Satellite Communications System

Designed and built for the demanding and rough environment at sea.

Features

- Voice, SMS, Data, and Vessel tracking
- 2.4 kbps and 9.6 kbps compressed data
- Programmable softkeys for e.g. Emergency Service
- Single antenna cable solution (up to 500 m)
- High-performance GNSS/GPS receiver
- High quality microphone, speaker, and equalizer for improved audio performance
- Bluetooth interface supporting voice, SMS, and data
- Voice prompt audio feedback
- Large 4.3” TFT display supporting day and night modes
- Firewall and user authentication for high level of security
- Webserver for configuration and maintenance
- Support external LAN Wi-Fi Access Points
- Support external SIP PABX and SIP handsets
- Connectivity of Smartphones, Softphones, and Apps

Technical Specifications

LT-3100 Satellite Communications System	
Certification & standards	Maritime CE, FCC, IC, RCM, RoHS 2, Iridium®
Vibration, operational	IEC 60945 (sine) & proprietary Maritime Random profile
Vibration, survival	Proprietary Maritime Random profile
Vibration, shock	Proprietary Maritime profile (20 g, 11 ms)
Power consumption: operating mode, max	37 W
Power consumption: standby mode, max	21 W
Power consumption: sleep mode, max	0.08 W
Compass Safe Distance, std.	0.85 m (2.8 ft)
Compass Safe Distance, steer.	0.65 m (2.1 ft)
LT-3110 Control Unit	
Weight	658 g (1.45 lbs)
Dimensions	224.0 x 120.0 x 70.0 mm (8.82 x 4.72 x 2.76 in)
Temperature, operational	-15°C to +55°C (+5°F to +131°F)
IP rating, dust and water	IP 32
Interfaces	Ethernet, auxiliary, DC input, chassis ground Antenna Unit (N conn.), Handset, Bluetooth, SIM card
Input voltage	10 - 32 VDC
LT-3120 Handset	
Weight	290 g (0.64 lbs)
Dimensions	208.8 x 52.8 x 38.2 mm (8.22 x 2.08 x 1.50 in)
Temperature, operational	-15°C to +55°C (+5°F to +131°F)
IP rating, dust and water	IP32
LT-3130 Antenna Unit	
Weight	687 g (1.51 lbs)
Dimensions	151.1 x Ø 149.5 mm (5.95 x Ø 5.89 in)
Temperature, operational	-25°C to +55°C (-13°F to +131°F)
IP rating, dust and water	IP67
Interfaces	Control Unit (N conn.)
Antenna communication cable	Coaxial cable, up to 500 m (1500 ft)
Warranty	2 year
Maintenance	None

In the Box	
LT-3110 Control Unit	P/N: 51-100987
LT-3120 Handset	P/N: 51-100988
LT-3121 Cradle	P/N: 51-101181
LT-3130 Antenna Unit	P/N: 51-100989
Bracket Mount, Control Unit	P/N: 91-100771
Power Cable, 3m	P/N: 91-100767
User & Installation Manual	P/N: 95-100765

Accessories	
Flush Mount, Control Unit	P/N: 91-100772
Bracket Mount (1.5" to 2.5" tube), Antenna Unit	P/N: 91-100773
Pole Mount (1.5" tube), Antenna Unit	P/N: 91-100774
Aux Cable, 3m	P/N: 91-100768
Coaxial Cable Ø4.9mm, 10m and 25m	
Coaxial Cable Ø10.3mm, 10m, 25m, and 50m	
Crimping Tool for Coaxial Cable Ø4.9mm and Ø10.3mm	

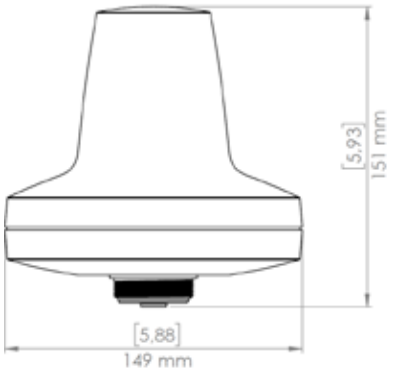

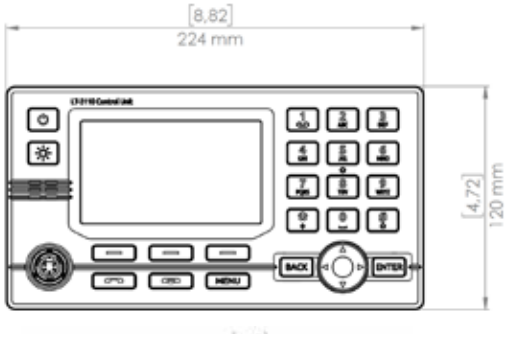

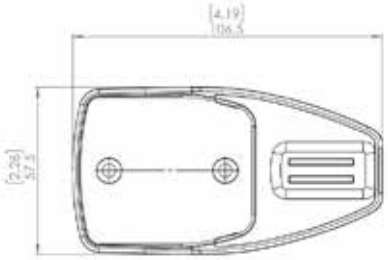

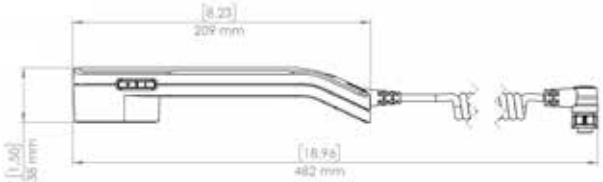

LT-3100S GMDSS System

LT-3100S Satellite Communications System

Designed and built for the demanding and rough environment at sea.

Iridium GMDSS

The LT-3100S GMDSS System is the new solution for GMDSS Distress and Safety communication via satellite. In early 2020, Iridium plans to start its GMDSS services and operation. Being recognized by the IMO and the SOLAS convention, it will be much more than an alternative to Inm-C, offering 100% global coverage and built-in Safety Voice.

Features:

- 100% global GMDSS coverage
- Distress Alert & Safety Voice
- Maritime Safety Information (MSI)
- BAM & ECDIS interface
- SSAS & LRIT
- Voice, SMS & Data
- Up to 500 m antenna cable

Technical Specifications

LT-3100S GMDSS System	
Certification & standards	Maritime CE, FCC, ISED, RCM, RED, MED (Wheel Mark), RoHS 2, Iridium®
LT-3110S Control Unit	
Weight	658 g (1.45 lbs)
Temperature, operational	-15°C to +55°C (+5°F to +131°F)
IP rating, dust and water	IP32
Interfaces	Ethernet, auxiliary, DC input, chassis ground, Antenna Unit (N conn.), Handset, SIM card
Input voltage	12 – 24 VDC
LT-3120 Handset	
Weight	290 g (0.64 lbs)
Temperature, operational	-15°C to +55°C (+5°F to +131°F)
IP rating, dust and water	IP32
LT-3130 Antenna Unit	
Weight	687 g (1.51 lbs)
Temperature, operational	-40°C to +55°C (-40°F to +131°F)
IP rating, dust and water	IP67
Interfaces	Control Unit (N conn.)
Antenna communication cable	Coaxial cable, up to 500 m (1500 ft)
LT-3140S Interface Unit	
Weight	720 g (1.59 lbs)
Temperature, operational	-15°C to +55°C (+5°F to +131°F)
IP rating, dust and water	IP10
Interfaces	4 x Ethernet, 2 x RS422, 4 x GPIO, 4 x CAN, DC input, chassis ground
Input voltage	12 – 24 VDC
LT-3150S Alarm Panel	
Weight	68 g (0.15 lbs)
Temperature, operational	-15°C to +55°C (+5°F to +131°F)
IP rating, dust and water	IP32
Interface	CAN
Warranty	2 year
Maintenance	None
In the Box	
LT-3110S Control Unit	P/N 51-101812
LT-3120 Handset	P/N 51-100988
LT-3121 Cradle	P/N 51-101181
LT-3130 Antenna Unit	P/N 51-100989
Bracket Mount, Control Unit	P/N 91-100771
Power Cable, 3m	P/N 91-102118
User & Installation Manual	P/N 95-101817

Accessories	
LT-3140S Interface Unit	P/N 51-101814
LT-3150S Alarm Panel	P/N 51-101815
LT-3160S Printer Adapter	P/N 51-101816
Flush Mount, Control Unit	P/N 91-100772
Bracket Mount (1.5" to 2.5" tube), Antenna Unit	P/N 91-100773
Pole Mount (1.5" tube), Antenna Unit	P/N 91-100774
Aux Cable, 3m	P/N 91-100768
Coaxial Cable Ø10mm, 10m, 25m and 50m	

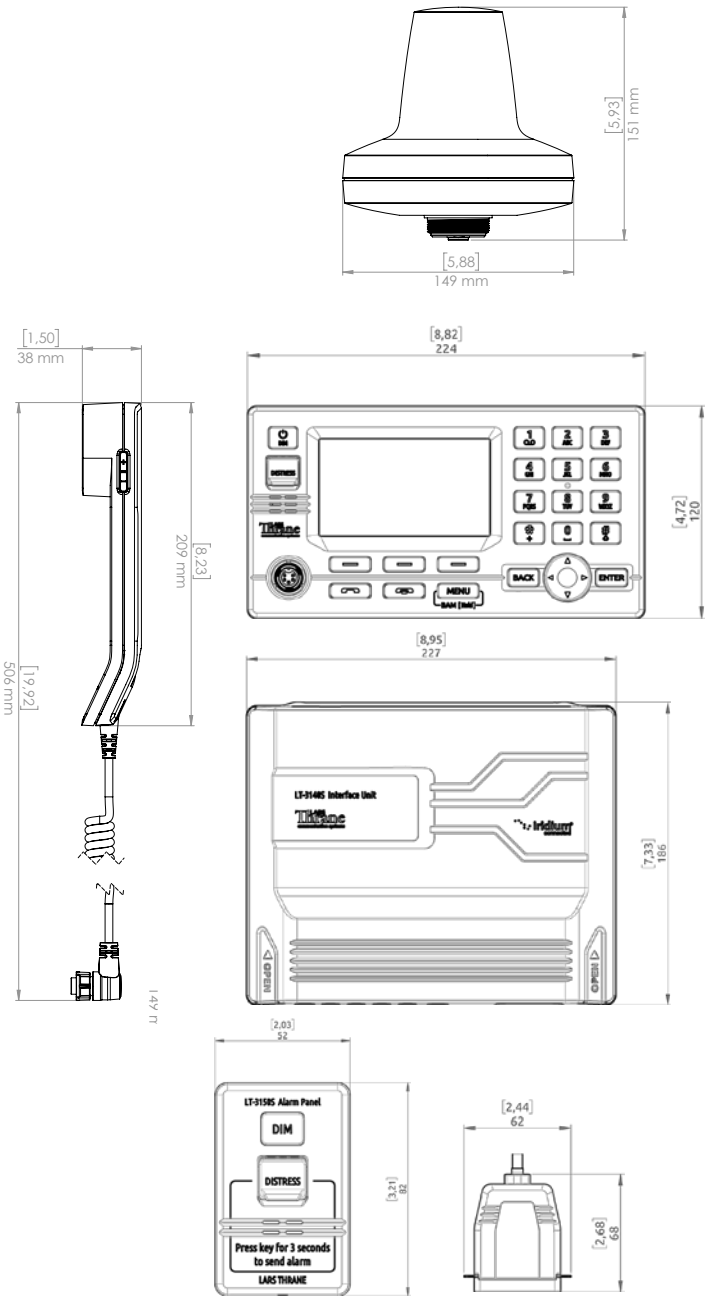

SAILOR® 6140 mini-C Maritime

New generation Inmarsat mini-C VMS & tracking solution

Sophisticated, dedicated Vessel Management System (VMS) and tracking terminal.

The SAILOR 6140 mini-C Maritime supersedes the well established SAILOR 3026M/S, which is used aboard thousands of professional fishing vessels worldwide, to meet mandatory requirements for the carriage of satellite tracking equipment.

Features:

- Designed for extreme conditions
- Ensures you meet requirements
- Data Reporting
- Advanced tracking functions
- Two-Way Messaging
- Event Reporting

Technical Specifications

General	
General specifications	Meets Inmarsat maritime specifications and IMO LRIT requirements
Inmarsat Type Approval	4TT097
Terminal Unit Specifications	
Operating frequencies	Rx Frequency Band: Rx: 1525 - 1545 MHz
Tx Frequency Band:	Tx: 1626.5 - 1646.5 MHz
GPS module	50 channel
Terminal interface	NMEA2K DeviceNet Mini-style, Male
Antenna Unit Specifications	
G/T	-23.7 dBk at 5° elevation
EIRP	Min. 7 dBW at 5° elevation
Antenna elevation	-15° to 90°
Power Specifications	
Absolute power supply range	10.5 - 32 VDC
Nominal power input	15 VDC
Power consumption (typical)	Rx: 1.85 W @ 15 VDC
	Tx: 22 W @ 15 VDC
Terminal Control Unit Specifications	
Interface options	CAN interface NMEA2K mini
	RS-232
	LAN interface RJ45
Dimensions And Weight	
mini-C Terminal	Diameter: 170.5 mm
	Height: 145 mm (without pole mount)
	Weight: 1.1 Kg
Terminal Control Unit	239 mm x 172 mm x 54 mm
	Weight: 0.8 Kg

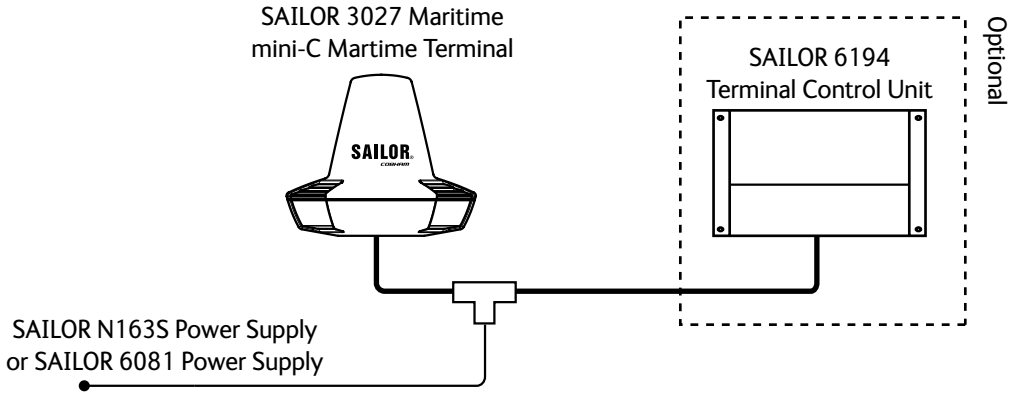

ThraneLINK

ThraneLINK is a sophisticated communication protocol that connects the SAILOR products in a network, offering important new opportunities to vessels. It provides facility for remote diagnostics and enables access to all the SAILOR products from a single point for service. This results in optimized maintenance and lower cost of ownership because less time is needed for troubleshooting and service. Installation is made easier as ThraneLINK automatically identifies new products in the system. The uniform protocol is an open standard which provides a future proof solution for all vessels.

SAILOR® 6110 mini-C GMDSS

Touch-screen security in an uncertain world

Provides GMDSS, SSAS and LRIT, and is a genuine next generation safety solution offering enhancements across the board.

The SAILOR 6110 mini-C is more than just a way to meet mandatory GMDSS requirements, because as part of the innovative SAILOR 6000 Series, it is an integral part of a vessel's communication system. The mini-C system features true triple functionality as it safely handles all GMDSS, SSAS and LRIT operation on board.

Features:

- First ever approved touch screen terminal for GMDSS use
- External storage via SD card or USB disk
- Innovative approach to cabling for simple networking and expansion
- Accurate, reliable 50 channel GPS module that is also Galileo ready
- ThraneLINK

Technical Specifications

Terminal Unit Specifications	
Inmarsat C GMDSS Type Approved	
Wheelmark Approved	
3027C mini-C Transceiver	
Antenna Unit Specifications	
G/T	-23.7 dBk at 5° elevation
EIRP	Min. 7 dBW at 5° elevation
Antenna elevation	-15° to 90°
Operating frequencies	Rx Frequency Band: Rx: 1525 - 1545 MHz
	Tx Frequency Band: Tx: 1626.5 - 1646.5 MHz
General Specifications	
Absolute power supply range	10.5 - 32 VDC
Nominal power input	15 VDC
Power consumption (typical)	Rx: 1.85 W @ 15 VDC
	Tx: 22 W @ 15 VDC
GPS module	50 channel (Galileo ready)
Transceiver interface	NMEA 2000 DeviceNet Mini-style, Male
I/O interface	CAN-BUS (NMEA 2000)
Dimensions	Diameter: 170.5 mm
	Height: 145 mm (without pole mount)
Weight	1.10 kg (without pole mount)

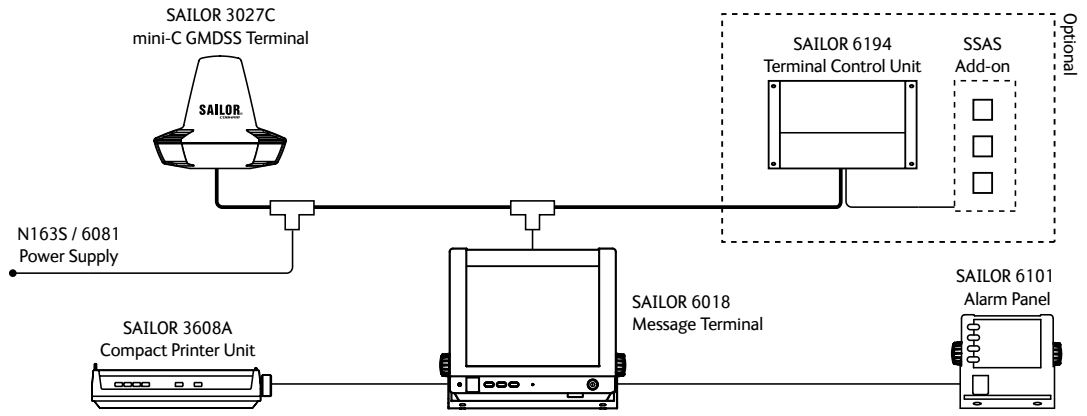

SAILOR® 6110 mini-C GMDSS System

The system is comprised of the following items:

SAILOR® 3027C mini-C GMDSS Terminal
The next generation mini-C terminal in the long line of successful SAILOR mini-C products.

SAILOR® 6018 Message Terminal
The revolutionary touch-screen message terminal features a 10.4" high resolution screen that offers seamless interface to all functions via the icon based interface. There is both SD card and USB ports for external storage.

SAILOR® 6194 Terminal Control Unit (TCU) - optional
The TCU is used in conjunction with the SSAS option as a connection point, but its functionality can be expanded at a later stage. It meets maritime standards, with easy access and connection.

SAILOR® 6101 Alarm Panel
A newly designed alarm panel for the SAILOR 6000 Series with both visual and audio alarm functionality as well as EGC message status. All received Inmarsat-C alarms can be muted with a single push.

SAILOR® 6103 Alarm Panel
This alarm panel has the same basic features as the SAILOR 6101 Alarm Panel but furthermore adds VHF and MF/HF distress functionality. As on the SAILOR 6101 Alarm Panel it is possible to mute all alarms with a single push.

SAILOR® 3608 Printer
SAILOR 3608 Compact Printer Unit This unit is designed to be connected to SAILOR 6006 Message Terminal to ensure that EGC and Safety messages can be printed.

SAILOR® Fleet One

Don't have the space or the budget for internet on your vessel?

Attractively priced reliable internet and global voice calling via SAILOR's compact antenna.

Ideal for smaller vessels

- Compact 30cm antenna
- Easy installation
- Data connectivity up to 100kbps and voice calling on a single line.
- Reliable Cobham network

AMI Connect Special Offer FleetOne Leisure Plan

Fleet One Package Includes:

Terminal

Monthly subscription
(Unlimited leisure plan)

Optional IP-Handset
(when purchased with FleetOne)

Technical Specifications

Approvals
Inmarsat Fleet One approved. Compliant to RTTE, CE Marked. Tested to FCC part 25

Frequency Band	
Rx	1518 - 1559 MHz
Tx	1626.5 - 1660.5 MHz
	1668.0 - 1675.0 MHz
Ch. spacing	10.5 -189 kHz, Rx 21 - 189 kHz, Tx
Ch. size	1.25 KHz

Recommended Antenna Cable	
Cable loss max/min	20 dB at 1,62 GHz and 1.0 Ω DC loop resistance
	max. 3 dB at 36 - max. 4 dB at 54 MHz

Power Supply and Consumption	
DC input range (isolated)	10.5V to 32V DC
Power (max),	120 W @ 10-32 V incl. antenna & PoE output

Environmental Conditions	
Ambient Temperature	-25 to +55°C
Storage	-40 to +85°C
Survival (power on, non functional)	-40 to +80°C
Automatic thermal surveillance shuts down system gradually in ease of own temperature	
BDU operating humidity	95% non-condensing at +40°C
ADU enclosure	IPX6
ADU operating humidity	"Exposed" according to EN60 945
BDU enclosure	IP30
Icing (survival)	Max 25 mm

Vibration (ADU)	
Vibration, operational	Random spectrum 1.05 g rms x 3 axes: 5 to 20 Hz: 0.02 g2/Hz 20 to 150 Hz: -3 dB/octave
Vibration, non-operational	Random spectrum 1.7 g rms 2 h x 3 axes (6 h total): 5 to 20 Hz: 0.05 g2/Hz, 20 to 150 Hz: -3 dB/octave

Ship Motion	
Roll	+/- 30 deg. per. 4 s, max 0.7 g tan.
Pitch	+/- 15 deg. per. 3 s, max 0.6 g tan.
Yaw	+/- 10 deg. per. 5 s, max 0.3 g tan.
Surge	+/- 0.5g
Sway	+/- 0.5g
Heave	+/- 0.7g
Turning rate	+/- 36˚/s; ACC 12˚/s²
Headway speed	22 m/s (42 knots)
Wind	100 knots

Mechanical Shock
20g/11 half-sine

Antenna Connector	
ADU	TNC, female
BDU	TNC, female

Services	
Standard IP	Up to 100 kbps
Streaming IP	-
ISDN Data	-
SMS (standard 3G)	160 characters
Standard Voice	4 kbps

Interfaces	
Ethernet/PoE	2 ports
Phone/Fax (2-wire)	1 port
I/O Connector	1 connector with 5 configurable inputs/outputs
Status LED	LED power indicator
SIM Card Slot	1 SIM Card slot for Fleet One SIM card
Router	Integral DHCP/NAT router
PBX	Built-in PBX

Coverage and Rate Regions

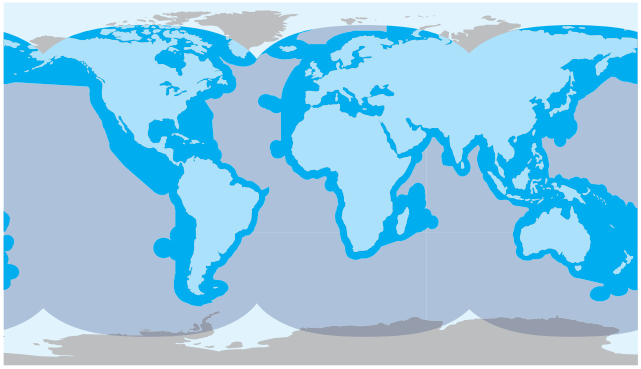

SAILOR Fleet One
Above Deck Unit (3,9 kg)

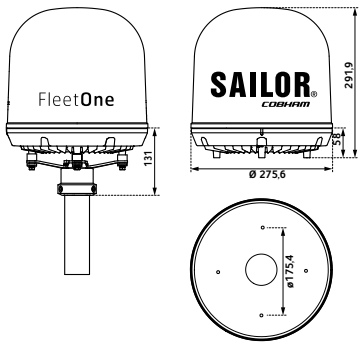

SAILOR Fleet One
Below Deck Unit (2,0 kg)

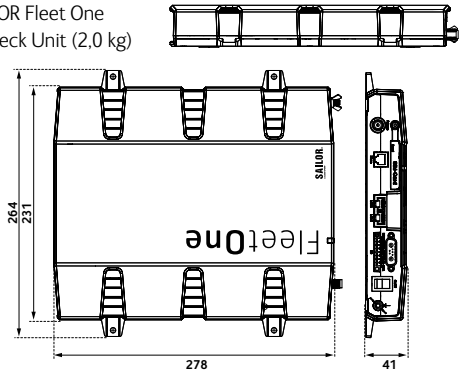

SAILOR® 4300 L-BAND

Coverage everywhere, and anytime you need it with SAILOR 4300 Iridium Certus

Next Generation

Ground-breaking L-band global satellite constellation, which features a cross-linked Low-Earth Orbit (LEO) architecture to provide 100% coverage over the earth's surface.

High Speeds for Heavy Duty requirements

Speeds suitable for data-heavy applications including; videoconferencing, multi-user Internet/ VPN, IoT and telemedicine, alongside regular usage including email, electronic forms/reporting and crew communication.

Global calling from anywhere on Earth

Guaranteed high bandwidth IP connectivity and three high-quality voice lines for global calling wherever you are.

Clever Certus Hardware

Low maintenance and compact antenna, only 30cm wide x 25cm high for installation flexibility.

iridium

Iridium Certus℠ and Iridium NEXT

Iridium NEXT features a cross-linked Low-Earth Orbit (LEO) architecture, providing coverage over 100 percent of the earth's surface and with SAILOR 4300 L-band on board, it guarantees high bandwidth connectivity as a primary channel or as an integral part of a multi-band communication networks.

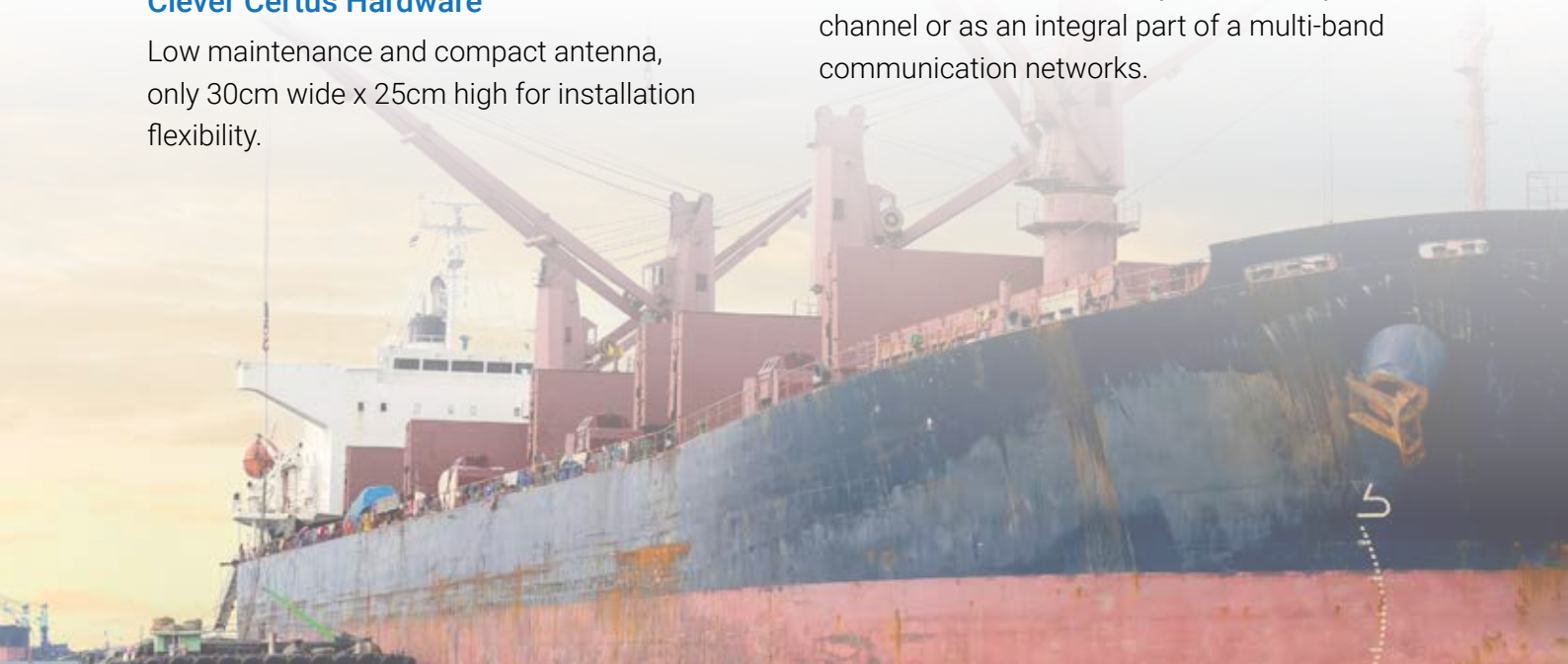

Technical Specifications

Approvals
Iridium next approved. Compliant to RED, CE Marked. Testet to FCC part 25

Frequency Band	
Rx	1616 - 1626.5 MHz
Tx	1616 - 1626.5 MHz

Recommended Antenna Cable	
Cable loss	Maximum 1.8ohm DC loop resistance maximum 10dB loss at 80MHz

Antenna Connectors	
ADU	TNC, female
BDU	TNC, female

Power Supply and Consumption	
DC input range (isolated)	10.8V to 31.2V
Power (max) incl. antenna & PoE output	120W @ 10-32 V

Environmental Conditions	
Ambient Temperature	-25 to +55°C
Storage	-35 to +85°C
Automatic thermal surveillance	Shuts down system gradually in ease of own temperature
BDU operating humidity	95% non-condensing at +40°C
BDU enclosure	IP31
ADU operating humidity	95% non-condensing at +40°C
ADU enclosure	IPX6

Vibration (ADU)	
Vibration, operational	Sine: Certified for IEC 60945 (8.7.2) Random spectrum 0,92 g rms x 3 axis 5 to 20 Hz: 0.01 g2/Hz 20 to 500 Hz: -3 dB/octave
Vibration, survival	Sine: Certified for IEC 60945 (8.7.2) dwell Random spectrum 1.7 g rms 2 h x 3 axes (6 h total): 5 to 20 Hz: 0.05 g2/Hz 20 to 150 Hz: -3 dB/octave

Ship Motion	
Roll	+/- 30 deg. per. 8 s, max 0.5 g tan.
Pitch	+/- 10 deg. per. 6 s, max 0.5 g tan.
Yaw	+/- 8 deg. per. 50 s, max 0.2 g tan.
Surge	+/- 0.2 g
Sway	+/- 0.2 g
Heave	+/- 0.5 g
Turning rate	+/- 6 deg/s; acc. 1 deg./s²
Headway speed	30 knots (15 m/s)
Wind	200 km/hr (108 knots)

Mechanical Shock
20g/11 half-sine

Specification	
Standard IP	176/352 kbps
Ethernet/LAN	4 ports
I/O Connector	1 connector
Status LED	Full status LED panel
SIM Card Slot	1 SIM Card slot for Iridium SIM card

SAILOR 4300 L-Band Above Deck Unit (8 kg)

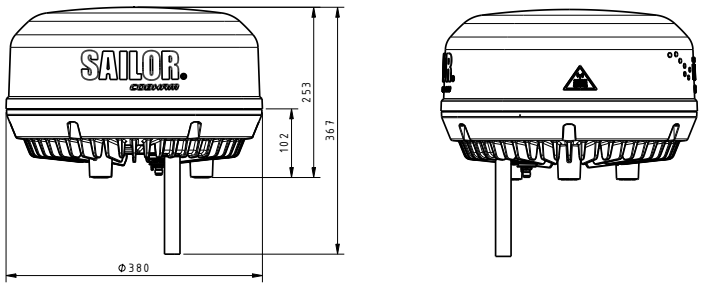

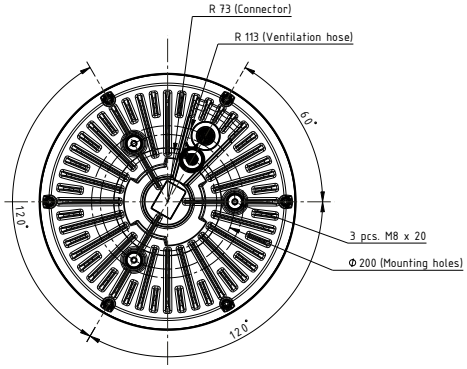

SAILOR 4300 L-Band Below Deck Unit (3.2kg)

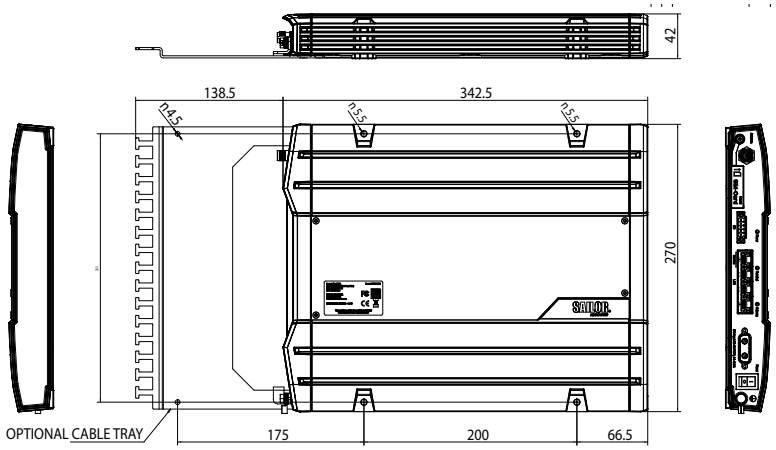

Connect v60E

65cm Ku-band Maritime VSAT Antenna System

Connect Coverage NX

Efficient RF Performance

AMI Connect's advanced RF design technology delivers highly efficient performance with compact and light mechanical structure compared to other 65 cm class systems. The v60E has improved tracking precision and reliability in a compact and streamlined mechanical design. The v60E system is only supplied with NJRC 6W BUC.

Connect Coverage NX Intelligent Diagnosis

AMI Connect's all-new integrated M&C platform Connect Coverage NX provides a responsive web user interface to manage and control the antenna system regardless of device types. The Installation Wizard in Connect Coverage NX automates functions for system configuration so that operators are minimally involved in system installation and operation.

Single Coaxial Cable

Combined Tx, Rx and DC power in a Single Cable solution, the v60E enables faster and cost efficient installation. The single coaxial cable is connected externally on the base of radome with no need to access the inside of the radome.

Standardized Modular Components Across E-Series

Modular components are used throughout the E-Series product range, such as motors with integrated encoders, main control unit and internal cables. Sharing common modules across AMI Connect's E-series antenna systems, the number of spare parts is reduced by more than 30%.

Connect Box

The Connect Box* - our unique 1U 19 inch rack mountable device enables you to use the attractive and affordable Connect mobile services by utilising your current KU band Satellite hardware.

Connect Global coverage area

Connect Regional coverage area

Data only packages

Maximum Information Rate (MIR) data transfer speed for below data packages: 3Mbits/1Mbits. 20GB and 40GB packages are available for sharing between a fleet of vessels. Each vessel will be required to pay a small monthly network connection fee. For further information on sales and subscriptions please get in touch. For details of 'always on' unlimited data packages see below.

'Always on' Unlimited Data

Data transfer speed (in Kbits) based on Maximum Information Rate (MIR). A monthly connection fee per vessel applies each package after first month which is FREE.

* Approximation of coverage only at time of issue. Subject to change at AMI Connect's discretion. No service or availability guarantees may be implied herewith.

Technical Specifications

Above Deck Unit	
Radome Height	93.5 cm / 36.81"
Radome Diameter	86 cm / 33.85"
Reflector Diameter	65 cm / 25.6"
ADU Weight	42 kg / 92.6 lbs
Platform	3-axis / Azimuth, Elevation, Cross-level
Azimuth Range	Unlimited
Elevation Range	-20°to +115°
Cross-level Range	Up to ± 37°
Stabilization Accuracy	0.2° max in presence of specified ship motions
Tx Frequency	13.75 ~ 14.5 GHz Ku-band
Tx Gain	37.7 dBi @ 14.25 GHz (excl. radome)
Rx Frequency	10.7 ~ 12.75 GHz Ku-band
Rx Gain	36.3 dBi@11.7 GHz (excl. radome)
G/T	15.4 dB/K@12.75 GHz (Clear Sky, 30° Elevation)
BUC Power	6W
LNB	Universal PLL LNB
Polarization	Linear, Cross-pol Only
Antenna Cable	Single 50 ohm coax cable for Rx, Tx, FSK, Reference and Power from ACU to ADU
Antenna Control Unit	
Dimension	(WxDxH) 43.1 cm x 35.0 cm x 4.4 cm / 17" x 13.8" x 1.7"
Weight	5.2 kg / 11.5 lbs
LED Indicator	6 LEDs for Power, INT/Search, Tracking, Lock, Setup, Error
Gyrocompass Interface	NMEA0183
Modem Interface	Ethernet port / RS-232C,-422C / I/O Console
Remote Management	Yes
Management Port	Yes
LAN Port	Yes
Power Requirement	100~240 V AC, 50~60 Hz, 3A

System Dimensions

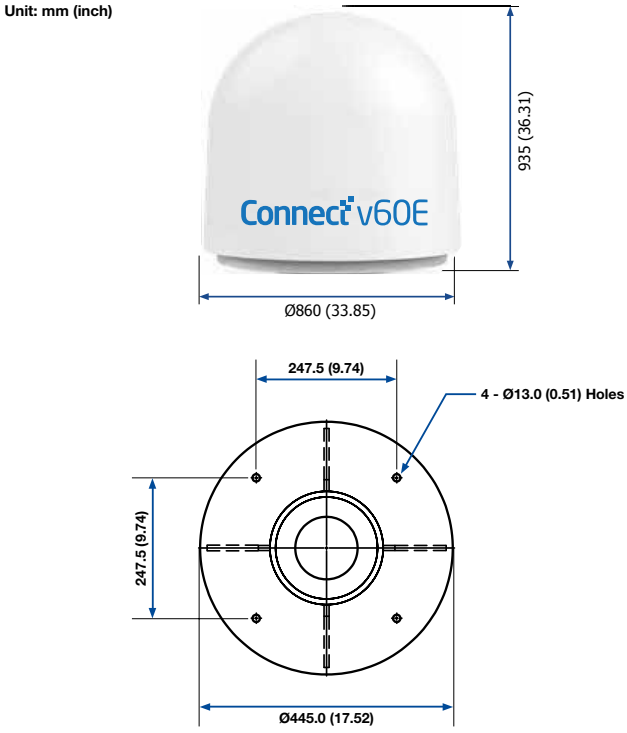

System Diagram

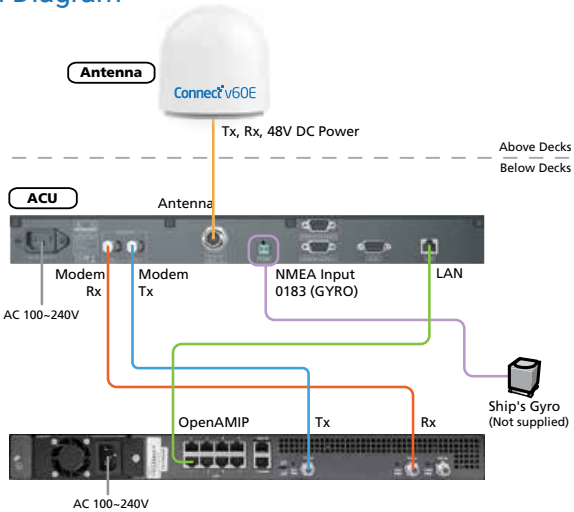

Connect v65

65cm Maritime VSAT Antenna System

Ku / Ka-band Convertible

3 YEAR GLOBAL WARRANTY

Connect Coverage

Frequency Mobility Delivered

The v65 can be converted from Ku-band operation to Ka-band in as little as 10 minutes through use of a compact, intuitive conversion kit (sold separately).

Superior RF performance

AMI Connect's high efficiency RF design delivers superior antenna gain and cross-pol isolation over all other 60cm class systems, enabling higher data rates and enhanced global services.

Get the power you need

The v65 is designed as a flexible communications platform built to meet the unique needs of any customer while maintaining commonality of spare parts. In Ku-band configuration, the system comes standard equipped with NJRC's 8W EXT Mini BUC, but can also support 4W and 16W variants out of the box. Ka-band configuration includes the NJRC 5W BUC.

Quick and easy installation

Shipped without any stow brackets and now featuring external RF cable connections on the radome base, there is no need to remove the radome of the v65 during installation, saving time and cost. AMI Connect's Gyro-free satellite search function further simplifies installation by providing the option to track satellites without any input from the ship's gyro-compass.

Reliability enhanced

The v65 is built upon the well-proven GX60 stabilized platform, currently in service on ships around the world. Additionally, new motors featuring built-in encorders and enhanced dynamic motor brakes deliver improved tracking precision in a more streamlined mechanical design.

Connect Coverage remote management

Connect Coverage, AMI Connect's proprietary Management & Control software, enables full remote access and control of the system from any device, anywhere in the world. Available via PC, Web and Mobile, Connect Coverage enhances remote diagnostics, automates routine processes, and includes a built in spectrum analyzer. The Connect Coverage API enables easy integration directly with the NOC for total fleet-wide visibility.

AMI Connect LAN Capability

The AMI Connect LAN port on the ACU provides easy networking connectivity to other AMI Connect systems enabling integrated monitoring and control of all AMI Connect networked devices through a common, intuitive interface.

Connect Box

The Connect Box* - our unique 1U 19 inch rack mountable device enables you to use the attractive and affordable Connect mobile services by utilising your current KU band Satellite hardware.

Connect Global coverage area

Connect Regional coverage area

Data only packages

Maximum Information Rate (MIR) data transfer speed for below data packages: 3Mbits/1Mbits. 20GB and 40GB packages are available for sharing between a fleet of vessels. Each vessel will be required to pay a small monthly network connection fee. For further information on sales and subscriptions please get in touch. For details of 'always on' unlimited data packages see below.

'Always on' Unlimited Data

Data transfer speed (in Kbits) based on Maximum Information Rate (MIR). A monthly connection fee per vessel applies each package after first month which is FREE.

* Approximation of coverage only at time of issue. Subject to change at AMI Connect's discretion. No service or availability guarantees may be implied herewith.

Technical Specifications

Physical	
Radome Height	104cm / 40.9"
Radome Diameter	90cm / 35.5"
Reflector Diameter	65cm / 25.6"
Weight	60kg / 132lbs
Stabilized Pedestal Assembly	
Platform	3-axis : Azimuth, Elevation, Cross-level
Azimuth Range	Unlimited
Elevation Range	-20° to 115°
Cross-level Rang	±37°
Stabilization Accuracy	0.2° peak mis-pointing @ max ship motion condition
Motor Brake System	Elevation, Cross-level
Reflector & Feed Assembly	
TX Frequency	13.75~14.5GHz Ku-band
TX Gain	37.7dBi @ Mid band
RX Frequency	10.7~12.75GHz Ku-band
RX Gain	36.3dBi @ Mid band
G/T	15.7dB/K (Clear Sky, 30° Elevation)
BUC	8W, 16W (optional)
LNB	PLL LNB
Polarization	Linear, Cross-pol only

Antenna Control Unit	
Dimensions (WxDxH)	43.1cm x 38.0cm x 4.4cm / 17" x 15" x 1.7"
Weight	3.5kg / 7.7lbs
Display	2 line 40 character graphic VFD module
Gyrocompass Interface	NMEA / NMEA 2000
Modem Interface	Ethernet port / RS-232C / I/O ports
Modem Protocol	iDirect, Comtech, SatLink, Hughes, GILAT
Remote Management	Yes
Wi-Fi Operation	Yes
Management Port	Yes
LAN Port	Yes
Power Requirement	100~240V AC, 50~60 Hz, 4A

Key Features

- Embedded power supply
- Supports up to 16W High Power BUC
- Remote firmware upgrade
- Automatic software diagnosis
- Heading device input not required
- Quick setup and install time

System Dimensions

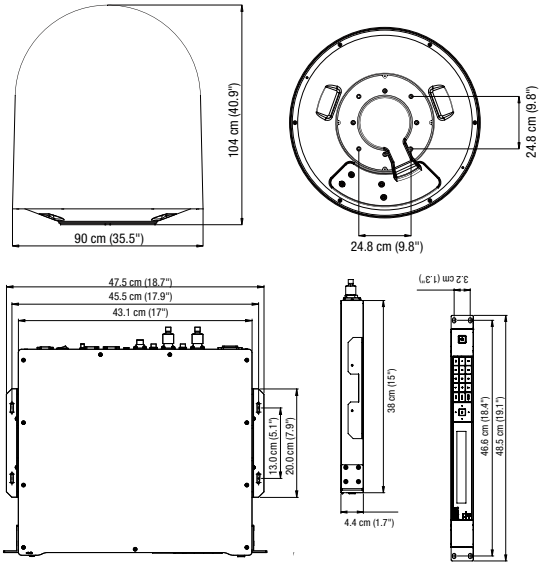

System Diagram

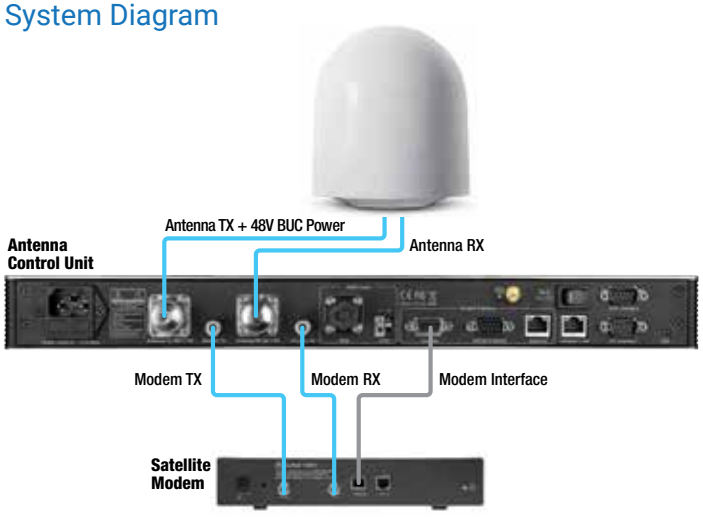

Connect VSAT

Fully Managed Communication solutions

Many options available to suit your vessel

Intellian COBHAM

From 60cm - 2.4m Dish Diameter

Termination and commission available via AMI Connect Service Department

Connect RedPort

RedPort Optimiser

Easily access accelerated satellite email, weather, web & tracking services while blocking unwanted data traffic.

RedPort Optimizer works together with either Iridium Mail & Web or RedPort XGate and many other satellite data optimization services to provide optimized email, web, weather, social media and blogging service. (Consult AMI Connect for compatibility.)

RedPort Optimizer works with smartphone, tablet and computer devices running the following operating systems: Android (current versions including those from Samsung, HTC, and more) Apple iOS (including iPad, iPhone, iPod Touch) Apple Macintosh (including Mac, MacBook, Mac Pro) Linux Windows.

Features:

- Satellite
  Turns any IP-based satellite data signal into a Wi-Fi Hotspot.
- Firewall
  Stops all unwanted data traffic, saving time and money.
- GSM support
  Plug in a compatible GSM USB- modem when you have GSM access to keep all the speed and convenience benefits of Optimizer, wherever you are.
- Wi-Fi Hotspot
  Makes setup and use with compatible computers and tablets easy.

Works with the following Iridium devices:

Iridium 9500 (with USB-to-Serial Adapter)
Iridium 9505
Iridium 9505A
Iridium 9555
Iridium Extreme®
Iridium OpenPort®
Iridium Pilot®

BYOD – Bring Your Own Device for Satellite Email, Web, Weather, Social Media and Tracking

Redport Optimizer makes satellite data easy – with the devices you already own.

Optimizer is the original BYOD (Bring Your Own Devices) satellite hotspot letting you access the services you need with the smartphones, tablets and computers you already have.

Optimizer broadcasts your satellite data feed as a Wi-Fi hotspot, let you easily access email, web, weather and social media services, and even track your location. Most importantly, its powerful firewall blocks all unwanted service to eliminate runaway satellite phone airtime bills.

Connect SeaBrowser

The seamless unified platform for voice and data communications

Options for self administered, flexible and budget friendly voice, data and email communications.

Variety of packages, and pre-configured server options available

Connect SeaBrowser Platform

All-in-one voice & data platform for on board communication and collaboration

- Self-registration & administration
- Suits Inmarsat, Iridium and VSAT terminals
- Voice calls, email, apps, web browsing
- Pre defined costs to suit all budgets
- Full pre-paid solution

Features for office & Vessel operations

Internet Tunnels
Controlled and efficient way to access internet & intranet resources

WorkMail (Business Email)
Use secure email with a domain of your choice. Supports Outlook, smart attachments, delivery notifications, blacklists, quota management, synchronised web-access from shore, IMAP and POP3

Voice (VOIP) & Inmarsat Voice
Connect to your office or call the bridge at a fraction of the cost by utilising data channel

Business chat
Collaborate freely and securely with your team in real time

File Sharing
Reliably share files between vessels (multicast). and your office. Works as FTP/DropBox alternative. Receive notifications when files are uploaded, downloaded, added or viewed. Transfer and store large files.

Features for crew welfare

Pre-Paid Web
Internet browsing with user configurable compression.

Voice
Prepaid voice system.

Crew email
Real-time crew email, with smart attachments.

Chat
IM services such as Google Hangouts (gTalk) and others.

Direct Internet Channels
Firewalled connection to social networks and internet browsing.

News
Multilingual headlines from news sources worldwide.

Connect SeaBrowser Workmail

WorkMail transforms the way you share, manage and collaborate on your most valuable business information between vessel & your office.

Features

- Industry highest traffic compression rates
- Secure & encrypted communications
- Multi-platform and Multi-client support
- Full transparency and control of all the mailboxes from your office
- Unlimited number of mail accounts
- Maximized bandwidth utilization & legacy systems support (POP3, MAPI)
- Scheduled backup of all mailboxes on board
- Extensive functionality for Crew mail
- Custom Domain
- Robust Email Rule Engine
- Special Support for large email attachments
- All company offices connected via SIP trunk to central PBX, allowing VOIP calls between all branches and vessels.

Connect SeaBrowser
Pre-configured servers

Hardware Specs	Basic	Pro	Pro Plus
CPU	i3	i5	i7
Memory	8GB RAM	8GB RAM	8GB RAM
Storage	128 SSD	128 SSD	128 SSD
Network	→WAN1-FBB/VSAT →LAN1-OPS & CREW →WIFI-BRIDGE	→WAN1-FBB →WAN2-VSAT →LAN1-OPS →LAN2-CREW →WIFI-BRIDGE	→WAN1-FBB →WAN2-VSAT →WAN3-3G →LAN1-OPS →LAN2-CREW →LAN3-IOT →WIFI-BRIDGE
SeaOS Networking and Firewall	SeaBrowser Rugged BOX (pre-installe , *		

Hardware Warranty

AMI Connect offers multiple delivery methods for warranty service, including but not limited to parts replacement and replacement server dispatches. Some components of the hardware you purchased may have a shorter warranty than that listed on your packing slip, invoice, receipt or other sales documentation.

Duration of Hardware Warranty: Up to 3 year extended warranty. See extended warranty details for more information.

Add Connect SeaProtect

Cyber security package that includes an advance firewall, antivirus for low bandwidth environments, anti-spam and web filtering protection.

Connect PTT

Beyond Line-Of-Sight Push-To-Talk and Data Communication

IP-based radio and data communications device that supports satellite/3G/LTE/LAN backhaul and Land Mobile Radio (LMR) integration to provide seamless switching between available networks in any situation.

Enhanced Capabilities

Solves many challenges faced by traditional LMR system operators:

- Coverage area can be extended by using satellite and existing cellular based networks.
- Lowers expensive terrestrial infrastructure costs
- High availability to support critical communications.
- Scalable from two to thousands of units.
- Seamless switching between available satellite, cellular, and LAN connectivity ensures constant communications
- Compatibility with many different brands of land mobile radios.
- Voice compression technologies are used to allow for the most efficient use of bandwidth across multiple transport mediums.
- 256 bit AES-CTR encryption

AMI Connect Head Office:
107 Forsyth Street, O'Connor 6163, WA
T: (08) 9331 0070
E: sales@amiconnect.com.au
Support: support@amiconnect.com.au

Branches Australia Wide & International
Perth, Adelaide, Sydney, Brisbane, Darwin, Cairns, Melbourne, Singapore & Vietnam

Visit us online: www.amiconnect.com.au
A Member of the AMI Group | ABN: 88 569 498 390